Datasheet

Juniper Networks EX 4200 Ethernet Switches with Virtual Chassis Technology

High-performance businesses demand high-performance networking solutions. These solutions include a new class of secure, scalable and always-on enterprise switch that advances the economics of networking by enabling businesses to deploy innovative new technologies that increase revenue and improve productivity. The Juniper Networks EX 4200 series Ethernet switches with Virtual Chassis™ technology combine the compact, pay-as-you-grow economics and low power and cooling requirements of stackable switches with the performance, availability, operational ease and port densities of chassis-based platforms to meet the demands of today's high-performance enterprises.

Product Description

The Juniper Networks EX 4200 series Ethernet switches with Virtual Chassis technology combine the High Availability (HA) and carrier-class reliability of modular systems with the economics and flexibility of stackable platforms, delivering a high-performance, scalable solution for data center, campus and branch office environments.

Offering a full suite of Layer 2 and Layer 3 switching capabilities as part of the base software, the EX 4200 series switches satisfy a variety of high-performance applications, including branch, campus and data center access deployments as well as Gigabit Ethernet (GbE) aggregation deployments. A single 24-port or 48-port switch can be deployed initially; as requirements grow, Juniper Virtual Chassis technology allows up to 10 EX 4200 series switches to be interconnected over a 128 Gigabit-per-second (Gbps) backplane and managed as a single device, delivering a scalable, pay-as-you-grow solution for expanding network environments. Flexible Gigabit Ethernet (GbE) and 10 Gigabit Ethernet (10GbE) uplink options enable high-speed connectivity to aggregation- or core-layer switches which connect multiple floors or buildings.

All EX 4200 series switches include HA features such as redundant, hot-swappable internal power supplies and field-replaceable, multi-blower fan trays to ensure maximum uptime. In addition, the base EX 4200 series switch models offer Class 3 power over Ethernet (PoE), delivering 15.4 watts on the first eight ports to support IP-enabled devices such as telephones, video cameras and wireless LAN (WLAN) access points for low-density converged networks. Full PoE options delivering 15.4 watts on all 24 or 48 ports are also available, making them ideal for high-density IP telephony deployments.

Each EX 4200 series switch includes an integrated application-specific integrated circuit (ASIC)-based packet-forwarding engine, the EX-PFE, while an integrated Route Engine (RE) delivers all control plane functionality. Based on field-proven Juniper technology, the Route Engine brings the same level of carrier-class performance and reliability to the EX 4200 series switches that Juniper routers bring to the world's largest service provider networks.

The EX 4200 series switches also leverage the same modular JUNOS™ software as Juniper router products, ensuring a consistent implementation and operation of each control plane feature across an entire Juniper infrastructure.

Juniper Networks Virtual Chassis Technology: Chassis-like Switch Features in a Stackable Form Factor

- Redundant, internal hot-swappable power supplies
- Hot-swappable fan tray with redundant blowers
- Consistent modular JUNOS software control plane feature implementation
- Dual Route Engines with Graceful Route Engine Switchover (GRES), non-stop routing (NSR*) and non-stop bridging (NSB*)
- Single management interface
- Easy, centralized software upgrades
- Scales from 24 to 480 ports with up to 20 10GbE uplinks

* Roadmap

Architecture and Key Components

The EX 4200 series switches are single rack-unit devices that deliver a compact solution for crowded wiring closets and access switch locations where space and power are at a premium. Each EX 4200 series switch supports optional front-panel uplink modules offering either four GbE ports or two 10GbE ports for high-speed backbone or link-aggregation connections between wiring closets and upstream aggregation switches. Uplink modules can be installed without powering down the switch, enabling users to add high-speed connectivity at any time or migrate from one uplink type to the other to deliver the ultimate in flexible, high-performance interconnectivity.

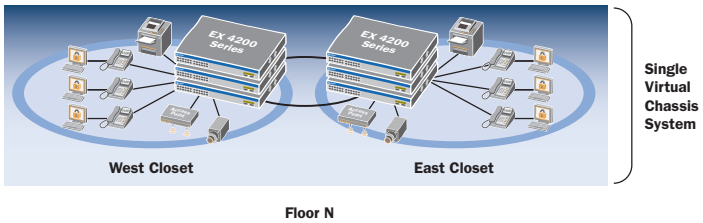

Figure 1: Using Virtual Chassis technology, up to 10 EX 4200 series switches can be interconnected to create a single logical device spanning multiple wiring closets, floors or even buildings.

The EX 4200 series switches also feature a front-panel LCD display that offers a flexible interface for performing device bring-up and configuration rollbacks, reporting switch alarm and LED status, or restoring the switch to its default settings. The LCD also displays a virtual chassis member switch's chassis "slot number" and Route Engine status for rapid identification and problem resolution.

Dual rear-panel virtual-chassis ports enable EX 4200 series switches to be interconnected over the 128 Gbps virtual backplane. Switches deployed in close proximity, such as wiring closets or top-of-rack data center applications, can be connected using a Juniper-supplied virtual-chassis cable.

In addition, a dedicated rear-panel RJ-45 port is available for out-of-band management, while a rear-panel USB port can be used to easily upload JUNOS software and configuration files.

Virtual Chassis Technology

Up to 10 EX 4200 series switches can be interconnected using Virtual Chassis technology to create a single logical device supporting up to 480 10/100/1000BASE-T ports or 240 100BASE-FX/1000BASE-X ports, plus an additional 40 GbE or 20 10GbE uplink ports. Different models can be mixed in a virtual-chassis configuration to provide a variety of port and density options.

In a virtual-chassis configuration, all switches are monitored and managed as a single device, enabling enterprises to separate physical topology from logical groupings of endpoints and allowing more efficient resource utilization. Highly resilient topologies can also be created using the 10GbE uplink ports to extend the virtual chassis configuration across long distances spanning multiple wiring closets, floors or even buildings.

Features and Benefits

Chassis-Class Availability

The EX 4200 series Ethernet switches deliver the same HA functionality and support many of the same failover capabilities as other Juniper chassis-based systems.

Each EX 4200 series switch is capable of functioning as a Route Engine. When two or more EX 4200 series switches are interconnected, they share a single control plane among all virtual-chassis member switches. When two EX 4200 series switches are interconnected, the JUNOS software automatically initiates an election process to assign a master (active) and backup (hot-standby) Route Engine. An integrated Layer 2 and Layer 3 Graceful Route Engine Switchover (GRES) feature maintains uninterrupted access to applications, services and IP communications in the unlikely event of a primary RE failure.

When more than two switches are interconnected in a virtual-chassis configuration, the remaining switch elements act as line cards and are available to assume the backup RE position should the designated master fail. Master, backup and line-card priority status can be assigned by the network operations team to dictate the order of ascension; this N + 1 RE redundancy, coupled with the GRES, non-stop routing (NSR) and non-stop bridging (NSB) capabilities of the JUNOS software, assures a smooth transfer of control plane functions following unexpected failures.

The EX 4200 series switches implement the same slot/module/port numbering schema as other Juniper chassis-based products when numbering virtual-chassis ports, providing true chassis-like operations. By utilizing a consistent operating system and a single configuration file, all switches in a virtual-chassis configuration are treated as a single device, simplifying overall system maintenance and management.

Individually, the EX 4200 series switches offer a number of HA features that are typically associated with modular chassis-based switches. When combined with the field-proven JUNOS software and L2/L3 failover capabilities, these features provide the EX 4200 series switches with true carrier-class reliability.

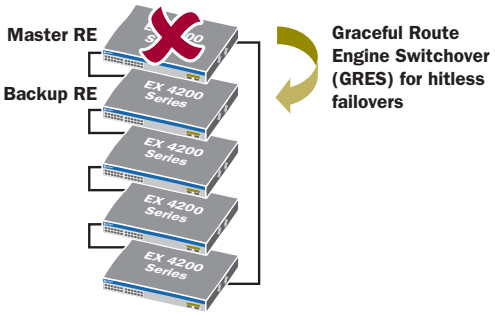

Figure 2: Support for Graceful Route Engine Switchover (GRES) ensures a smooth and seamless transfer of control plane functions following a master Route Engine failure.

- **Redundant power supplies:** The EX 4200 series Ethernet switches support internal redundant, load-sharing, hot-swappable AC power supplies to maintain uninterrupted operations. Thanks to their compact footprint, the EX 4200 series switches require significantly less power than chassis-based switches delivering equivalent port densities.
- **Hot-swappable fan tray with multiple blowers:** The EX 4200 series switches include a hot-swappable, field-replaceable fan tray with three blowers, providing sufficient cooling even if one of the blowers were to fail.
- **Redundant Trunk Group (RTG):** To avoid the complexities of the Spanning Tree Protocol (STP) without sacrificing network resiliency, the EX 4200 series switches employ redundant trunk group to provide the necessary port redundancy and simplify switch configuration.
- **Cross-member link aggregation:** Cross-member link aggregation allows redundant link aggregation connections between devices in a single virtual-chassis configuration, providing an additional level of reliability and availability.
- **Carrier-class hardware:** The EX 4200 series switches leverage a purpose-built packet forwarding engine ASIC, the EX-PFE, which integrates much of the same intellectual property used in Juniper Networks carrier routers. As a result, the EX 4200 series switches deliver the same predictable, scalable functionality found in the world's largest networks.

Carrier-Class Operating System

The EX 4200 series switches run the same JUNOS operating system software used by Juniper routers to power the world's largest and most complex networks.

By utilizing a common operating system, Juniper delivers a consistent implementation and operation of control-plane features across all products. To maintain that consistency, the JUNOS software adheres to a highly disciplined development process that utilizes a single source code, follows a single quarterly release train, and employs a highly available modular architecture that prevents isolated failures from bringing an entire system down.

These attributes are fundamental to the core value of the software, enabling all JUNOS-powered products to be updated simultaneously with the same software release. All features are fully regression-tested, making each new release a true superset of the previous version; customers can deploy the software with complete confidence that all existing capabilities will be maintained and operate in the same way.

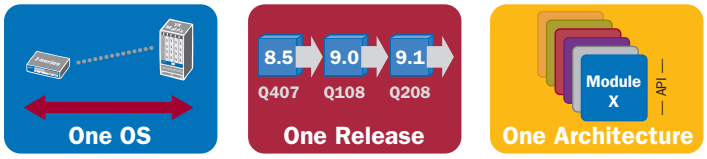

Figure 3: The JUNOS software utilizes a single source code, adheres to a consistent and predictable release train, and employs a single modular architecture.

Converged Networks

The EX 4200 series Ethernet switches provide the highest levels of availability for the most demanding converged data, voice and video environments, delivering the most reliable platform for unifying enterprise communications.

By providing Class 3 PoE with 15.4 watts on some or all ports to power voice over IP (VoIP) telephones, closed-circuit security cameras, wireless access points, and other IP-enabled devices, the EX 4200 series switches deliver a future-proofed solution for converging disparate networks onto a single IP infrastructure.

To ease deployment, the EX 4200 series switches support the industry-standard link-layer discovery protocol (LLDP) and LLDP-Media Endpoint Detection (LLDP-MED), which enable the switches to automatically discover Ethernet-enabled devices, determine their power requirements and assign virtual LAN (VLAN) parameters.

In addition, the EX 4200 series switches support rich quality of service (QoS) functionality for prioritizing data, voice and video traffic. The switches support eight QoS queues on every port, enabling them to maintain multi-level, end-to-end traffic prioritizations. The EX 4200 series switches also support a wide range of policy options, including priority and shaped deficit weighted round-robin (SDWRR) queuing.

Security

The EX 4200 series Ethernet switches fully integrate with the Juniper Networks Unified Access Control (UAC) solution, which consolidates all aspects of a user's identity, device and location, enabling administrators to enforce access control and security down to the individual port or user levels.

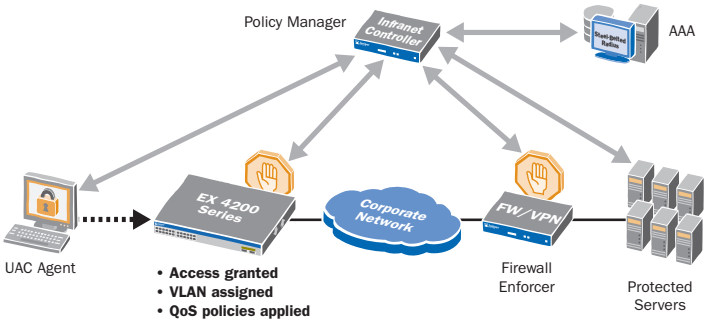

Figure 4: The EX 4200 series switches work with the Juniper UAC solution to enforce access control down to the individual port level.

Working as an enforcement point within the UAC solution, the EX 4200 series switches provide both standards-based 802.1X port-level access control as well as Layer 2-4 policy enforcement based on user identity, location and/or device. A user's identity, device type, machine posture check and location can be used to determine whether access should be granted and for how long. If access is granted, the switch assigns the user to a specific VLAN based on authorization levels. The switch can also apply QoS policies or mirror user traffic to a central location for logging, monitoring or threat detection by intrusion prevention systems.

The EX 4200 series switches also provide a full complement of port security features including DHCP (Dynamic Host Configuration Protocol) snooping, DAI (Dynamic ARP Inspection), MAC limiting and IP Source Guard to defend against internal and external spoofing, man-in-the-middle and denial of service (DoS) attacks.

Simplified Management and Operations

When employing Virtual Chassis technology, the EX 4200 series switches dramatically simplify network management. Up to 10 interconnected EX 4200 series switches can be managed as a single device. Each virtual chassis group utilizes a single JUNOS software image file and a single configuration file, reducing the overall number of units to monitor and manage. When the JUNOS software is upgraded on the master switch in a virtual-chassis configuration, the software is automatically upgraded on all other member switches at the same time.

The EX 4200 series switches also include port profiles that allow network administrators to automatically configure ports with security, QoS and other parameters based on the type of device connected to the port. Six preconfigured profiles are available, including default, desktop, desktop plus IP phone, wireless access point, routed uplink and Layer 2 uplink. Users can select from the existing profiles or create their own and apply them through the Command Line Interface (CLI) or management system.

Four system management options are available for the EX 4200 series switches. The standard JUNOS software CLI management interface offers the same granular capabilities and scripting parameters found in any JUNOS software powered device. The EX 4200 series switches also include the integrated J-Web management tool, an embedded device manager that allows users to configure, monitor, troubleshoot and perform system maintenance on individual switches via a browser-based graphical interface.

When managing a group of EX 4200 series switches, the Juniper NetScreen-Security Manager (NSM) provides system-level management across all Juniper switches in the network, from a single console.

Finally, EX 4200 series switch system, performance and fault data can be exported to leading third-party management systems such as HP OpenView, IBM Tivoli and Computer Associates Unicenter, to provide a complete, consolidated view of network operations.

Product Options

Five EX 4200 series switch models are available (see Table 1 below).

Table 1: EX 4200 Series Ethernet Switches

Model	Access Port Configuration	PoE Ports	Height	System Power (with PoE)
EX 4200-24T	24-port 10/100/1000BASE-T	8	1RU	320 W AC
EX 4200-24P	24-port 10/100/1000BASE-T	24	1RU	600 W AC
EX 4200-24F	24-port 100BASE-FX/1000BASE-X (SFP)	N/A	1RU	320 W AC
EX 4200-48T	48-port 10/100/1000BASE-T	8	1RU	320 W AC
EX 4200-48P	48-port 10/100/1000BASE-T	48	1RU	930 W AC

EX 4200 Series Ethernet Switch Specifications

Physical Specifications

- 24-port copper switches:
  - 24 10/100/1000BASE-T ports: 8 PoE (802.3af compliant)@ 15.4 W; 320 W PSU
  - 24 10/100/1000BASE-T ports: 24 PoE (802.3af compliant)@ 15.4 W; 600 W PSU
- 48-port copper switches:
  - 48 10/100/1000BASE-T ports: 8 PoE (802.3af compliant)@ 15.4 W; 320 W PSU
  - 48 10/100/1000BASE-T ports: 48 PoE (802.3af compliant)@ 15.4 W; 930 W PSU
- 24-port fiber switches:
- 24 100BASE-FX/1000BASE-X SFP ports; 320 W PSU
- Backplane: 128 Gbps virtual-chassis interconnect to combine up to 10 units as a virtual chassis
- Uplink module options:
  - 4-port 1GbE module with pluggable SFP optics
  - 2-port 10GbE module with pluggable XFP optics

Power Options

- Power supplies: Autosensing; 100-120 V / 200-240 V; AC 320 W, 600 W and 930 W dual load-sharing hot-swappable internal redundant power supplies
- External RPS option
- Minimum number of PSUs required for fully loaded chassis: 1 per switch

Dimensions (W x H x D)

17.4[1] x 1.7[2] x 16.4[3] in

(44.2[1] x 4.3[2] x 41.7[3] cm)

[1] Desktop installation width noted above, rack-mount width is 17.5 in (44.5 cm)

[2] Height: 1 RU

[3] Depth with 320 W PSU noted above, 18.8 in (47.8 cm) with 600/930 W PSU

Weight

- EX 4200-24T with 320 W PSU: 16.5 lb (7.5 kg)
- EX 4200-24P with 600 W PSU: 17.2 lb (7.8 kg)
- EX 4200-48T with 320 W PSU: 17.1 lb (7.8 kg)
- EX 4200-48P with 930 W PSU: 18.2 lb (8.3 kg)
- EX 4200-24F with 320 W PSU: 16.1 lb (7.3 kg)

Environmental Ranges

- Operating temperature: 32° to 113° F (0° to 45°C)
- Storage temperature: -40° to 158° F (-40° to 70° C)
- Operating altitude: up to 10,000 ft (3,049 m)
- Non-operating altitude: up to 16,000 ft (4,877 m)
- Relative humidity operating: 10% to 85% (noncondensing)
- Relative humidity non-operating: 0% to 95% (noncondensing)

Cooling

- Field-replaceable fan tray with multiple blowers (3)
- Switch remains operational if one blower fails

Hardware Specifications

- Switching Engine Model: Store and forward
- DRAM – 1 GB with ECC
- Flash – 1 GB
- CPU – 1 GHz PowerPC CPU
- 10/100/1000BASE-T connector type: RJ-45
- GbE SFP optic/connector type: RJ-45 or LC SFP fiber supporting 1000BASE-T SFP, SX (multimode), LX (single-mode) or ZX (single-mode)
- 100BASE-FX support on SFP ports: SX
- GbE port density per system:
  - 24P/24T/24F: 28 (24 host ports + four-port GbE uplink module)
  - 48P/48T: 52 (48 host ports + four-port GbE uplink module)
- 10GbE XFP optic/connector type: 10GE XFP, SR (multimode), LR (single-mode), ER (single-mode) or ZR (single-mode)
- 10GbE port density per system (all models): 2 (uplink module)
- IPv6, MPLS and GRE tunnel hardware support

Physical Layer

- Time Domain Reflectometry (TDR) for detecting cable breaks and shorts: 24P/24T and 48P/48T only
- Auto MDI/MDIX support: 24P/24T and 48P/48T only (all ports)
- Port speed downshift/setting max advertised speed on 10/100/1000BASE-T ports: 24P/24T and 48P/48T only, on all ports

Packet Switching Capacities

- 24P/24T: 88 Gbps
- 48P/48T: 136 Gbps
- 24F: 88 Gbps

Layer 2 Throughput (Mpps)

- 24P/24T: 65 Mpps (wire speed)
- 48P/48T: 101 Mpps (wire speed)
- 24F: 65 Mpps (wire speed)

Layer 2 Switching

- Max MAC addresses per system: 24,000
- Static MAC entries: 24,000
- Jumbo frames: 9216 Bytes
- Number of VLANs: 4,096
- Port-based VLAN
- MAC-based VLAN
- GVRP
- VLAN tagging: 802.1Q
- Voice VLAN
- Physical port redundancy: Redundant trunk group (RTG)
- STP (802.1D-2004)
- Compatible with PVST+
- STP enable/disable per port
- Rapid-Spanning Tree (802.1D-2004)

Layer 2 Switching (cont'd)

- MST (802.1D-2004)
- Number of 802.1s instances supported: 64
- LLDP
- LLDP-MED with VoIP integration
- RVI (Routed VLAN Interface)

Layer 3 Features: IPv4

- Max number of ARP entries: 16,000
- Max number of IPv4 unicast routes in hardware: 12,000
- Max number of IPv4 multicast routes in hardware: 2,000
- Routing protocols: RIPv1/v2, OSPF, BGP, ISIS
- Static routing
- Routing policy
- Bidirectional Forwarding Detection
- Layer 3 redundancy: VRRP

Security

- MAC limiting
- Allowed MAC addresses – configurable per port
- Dynamic ARP Inspection (DAI)
- Local proxy ARP
- Static ARP support
- DHCP snooping

Access Control Lists (ACLs) (JUNOS firewall filters)

- Port-based ACL (PACL) – Ingress
- VLAN-based ACL (VACL) – Ingress and Egress
- Router-based ACL (RACL) – Ingress and Egress
- ACL entries (ACE) in hardware per system: 7,000
- ACL counter for denied packets
- ACL counter for permitted packets
- Ability to add/remove/change ACL entries in middle of list (ACL editing)
- Layer 2 – L4 ACL
- 802.1X port-based
- 802.1X multiple supplicants
- 802.1X with VLAN assignment
- 802.1X with authentication bypass access (based on host MAC address)
- 802.1X with VoIP VLAN support
- 802.1X dynamic ACL based on RADIUS attributes
- 802.1X Supported EAP types: MD5, TLS, TTLS, PEAP
- MAC Authentication (local)
- Control Plane DoS protection

High Availability

- Redundant, hot-swappable power supplies
- Redundant, field-replaceable, hot-swappable fans
- Graceful Route Engine Switchover (GRES) for Layer 2 hitless forwarding and Layer 3 protocols on RE failover
- Graceful protocol restart – OSPF, BGP
- Layer 2 hitless forwarding on RE failover
- Online insertion and removal (OIR) uplink module

Link Aggregation

- 802.3ad (LACP) support:
  - Number of LAG groups supported: 64
  - Max number of ports per LAG group: 8
- LAG load-sharing algorithm – Bridged Unicast Traffic:
  - IP: S/D MAC, S/D IP
  - TCP/UDP: S/D MAC, S/D IP, S/D Port
  - Non-IP: S/D MAC
- LAG-sharing algorithm – Routed Unicast Traffic:
  - IP: S/D MAC, S/D IP
  - TCP/UDP: S/D MAC, S/D IP, S/D Port
  - Non-IP: S/D MAC
- LAG load-sharing algorithm – Bridged Multicast Traffic:
  - IP: S/D MAC, S/D IP
  - TCP/UDP: S/D MAC, S/D IP, S/D Port
  - Non-IP: S/D MAC
- LAG-sharing algorithm – Routed Multicast Traffic:
  - IP: S/D MAC, S/D IP
  - TCP/UDP: S/D MAC, S/D IP, S/D Port
  - Non-IP: S/D MAC
- Tagged ports support in LAG group

QoS

- Layer 2 QoS
- Layer 3 QoS
- Ingress policing: 1 rate 2 color
- Hardware queues per port: 8
- Scheduling methods (egress): Strict priority (SP), Shaped Deficit Weighted Round-Robin (SDWRR)
- 802.1p, DSCP/IP Precedence trust and marking
- Layer 2-4 classification criteria: Interface, MAC address, Ethertype, 802.1p, VLAN, IP address, DSCP/IP Precedence, TCP/UDP port numbers, etc.
- Congestion avoidance capabilities: Tail Drop

Multicast

- IGMP: v1, v2, v3*
- IGMP snooping*
- PIM-SM
- IPv4 Multicast hardware entries: 2,000

Services and Manageability

- JUNOS CLI
- Web interface
- Out-of-band management: Serial; 10/100/1000BASE-T Ethernet
- ASCII configuration
- Rescue configuration
- Configuration rollback
- Image rollback
- LCD management
- Element management tools: NetScreen-Security Manager (NSM)
- Proactive services support via Advanced Insight Solutions (AIS)
- SNMP: v1, v2c, v3
- RMON (RFC 2819) Groups 1, 2, 3, 9

* Roadmap

Services and Manageability (cont'd)

- NTP
- DHCP server
- DHCP client and DHCP proxy
- DHCP relay and helper
- RADIUS
- TACACS+
- SSHv2
- Secure copy
- HTTP/HTTPs
- DNS resolver
- Syslog logging
- Temperature sensor
- Config-backup via FTP / secure copy

Troubleshooting

- Debugging: CLI via console, telnet or SSH
- Diagnostics: Show and debug cmd, statistics
- Traffic mirroring (port)
- Traffic mirroring (VLAN)
- ACL-based mirroring
- Mirroring destination ports per system: 1
- LAG port monitoring
- Multiple destination ports monitored to 1 mirror (N:1)
- Max number of mirroring sessions: 1
- Mirroring to remote destination (over L2): 1 destination VLAN
- IP tools: Extended ping & trace
- Juniper commit and rollback

Safety and Compliance

Safety Certifications

- UL-UL60950-1(First Edition)
- C-UL to CAN/CSA 22.2 No.60950-1(First Edition)
- TUV/GS to EN 60950-1, Amendment A1-A4, A11
- CB-IEC60950-1, all country deviations

Electromagnetic Compatibility Certifications

- FCC 47CFR Part 15 Class A
- EN 55022 Class A
- ICES-003 Class A
- VCCI Class A
- AS/NZS CISPR 22 Class A
- CISPR 22 Class A
- EN 55024
- EN 300386
- CE

Environmental

Reduction of Hazardous Substances (ROHS) 5

Noise Specifications

- Office Product Spec: 48dBA at 30°C (refer to ISO 7779)

Telco

- CLEI code

Ordering Information

Model Number	Description
Switches and Software Licences	
EX 4200-24T	24-port 10/100/1000BASE-T (8 PoE ports) – 320 W AC PSU
EX 4200-24P	24-port 10/100/1000BASE-T (24 PoE ports) – 600 W AC PSU
EX 4200-48T	48-port 10/100/1000BASE-T (8 PoE ports) – 320 W AC PSU
EX 4200-48P	48-port 10/100/1000BASE-T (48 PoE ports) – 930 W AC PSU
EX 4200-24F	24-port 100BASE-FX/1000BASE-X SFP – 320 W AC PSU
EX-24-AFL*	Advanced Feature License for EX 4200-24T, EX 4200-24P, EX 4200-24F switches
EX-48-AFL*	Advanced Feature License for EX 4200-48T and EX 4200-48P switches
Uplink Modules	
EX-UM-2XFP	2-port 10GbE XFP Uplink Module
EX-UM-4SFP	4-port GbE SFP Uplink Module
Power Supplies**	
EX-PWR-320-AC	320 W AC Power Supply Unit (PSU)
EX-PWR-600-AC	600 W AC Power Supply Unit (PSU)
EX-PWR-930-AC	930 W AC Power Supply Unit (PSU)
Pluggable Optics	
EX-SFP-1GE-SX	SFP, GbE, 850nm, 550m Reach, SX, With DDM
EX-SFP-1GE-LX	SFP, GbE, 1310nm, 10km Reach, LX, With DD
EX-SFP-1GE-LH	SFP, GbE, 1550nm, 70km Reach, LH (ZX), With DDM
EX-SFP-1GE-T	740-013111 is the 1000BASE-T only SFP
EX-SFP-1FE-FX	SFP, 100BASEFX SGMII SFP 1310nm, 2K
EX-XFP-10GE-SR	XFP, 10GE-SR, 850nm, 300m Reach,
EX-XFP-10GE-LR	XFP, 10GE-LR / OC-192-SR1, 1310nm, 10Km Reach, Multi Rate
EX-XFP-10GE-ER	XFP, 10GE-ER / OC-192-IR2, 1550nm, 40Km Reach, Multi Rate
EX-XFP-10GE-ZR	XFP, 10GE-ZR / OC-192-LR2, 1550nm, 80Km Reach, Multi Rate

* AFL including IPv6 Routing, IS-IS, BGP, MBGP, MPLS, Enhanced GRE Tunnels (> 7) available for purchase with JUNOS 9.1 in Q2'08.

**Each switch comes with one power supply; power supply SKUs are for sparing or ordering internal redundant power supplies.

Juniper your Net™

About Juniper Networks

Juniper Networks, Inc. is the leader in high-performance networking. Juniper offers a high-performance network infrastructure that creates a responsive and trusted environment for accelerating the deployment of services and applications over a single network. This fuels high-performance businesses. Additional information can be found at www.juniper.net.

CORPORATE HEADQUARTERS
AND SALES HEADQUARTERS FOR
NORTH AND SOUTH AMERICA
Juniper Networks, Inc.
1194 North Mathilda Avenue
Sunnyvale, CA 94089 USA
Phone: 888.JUNIPER (888.586.4737)
or 408.745.2000
Fax: 408.745.2100
www.juniper.net

EUROPE, MIDDLE EAST, AFRICA
REGIONAL SALES HEADQUARTERS
Juniper Networks (UK) Limited
Building 1
Aviator Park
Station Road
Addlestone
Surrey, KT15 2PG, U.K.
Phone: 44.(0).1372.385500
Fax: 44.(0).1372.385501

EAST COAST OFFICE
Juniper Networks, Inc.
10 Technology Park Drive
Westford, MA 01886-3146 USA
Phone: 978.589.5800
Fax: 978.589.0800

ASIA PACIFIC REGIONAL SALES HEADQUARTERS
Juniper Networks (Hong Kong) Ltd.
26/F, Cityplaza One
1111 King's Road
Taikoo Shing, Hong Kong
Phone: 852.2332.3636
Fax: 852.2574.7803

Copyright 2008 Juniper Networks, Inc. All rights reserved. Juniper Networks, the Juniper Networks logo, NetScreen, and ScreenOS are registered trademarks of Juniper Networks, Inc. in the United States and other countries. JUNOS and JUNOSe are trademarks of Juniper Networks, Inc. All other trademarks, service marks, registered trademarks, or registered service marks are the property of their respective owners. Juniper Networks assumes no responsibility for any inaccuracies in this document. Juniper Networks reserves the right to change, modify, transfer, or otherwise revise this publication without notice.

100215-001 Jan 2008

To purchase Juniper Networks solutions, please contact your Juniper Networks sales representative at 1-866-298-6428 or authorized reseller.